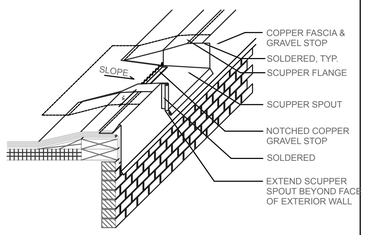

SCUPPER DETAIL

SCALE: N.T.S.

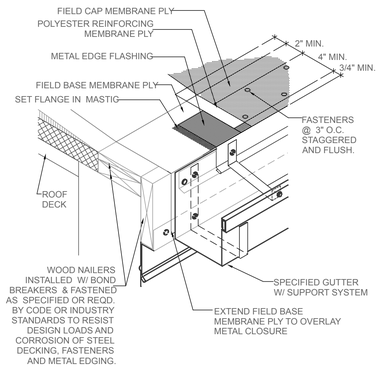

GUTTER DETAIL

SCALE: N.T.S.

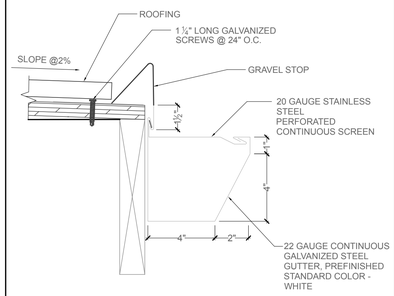

5" X 6" GUTTER DETAIL

SCALE: N.T.S.

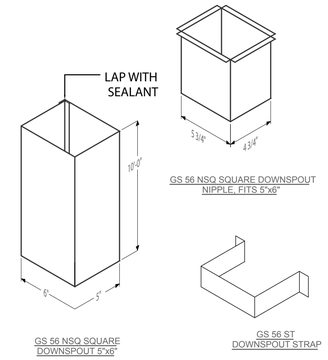

DOWNSPOUT DETAILS

SCALE: N.T.S.

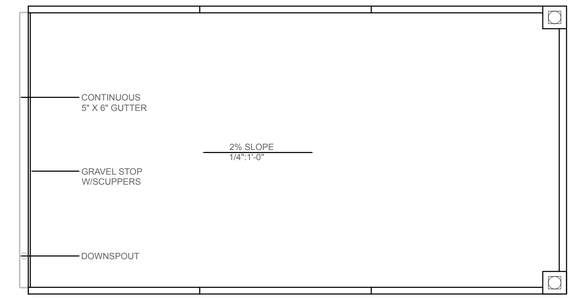

GUTTER & DOWNSPOUT PLAN

SCALE: 1/4" = 1'-0"

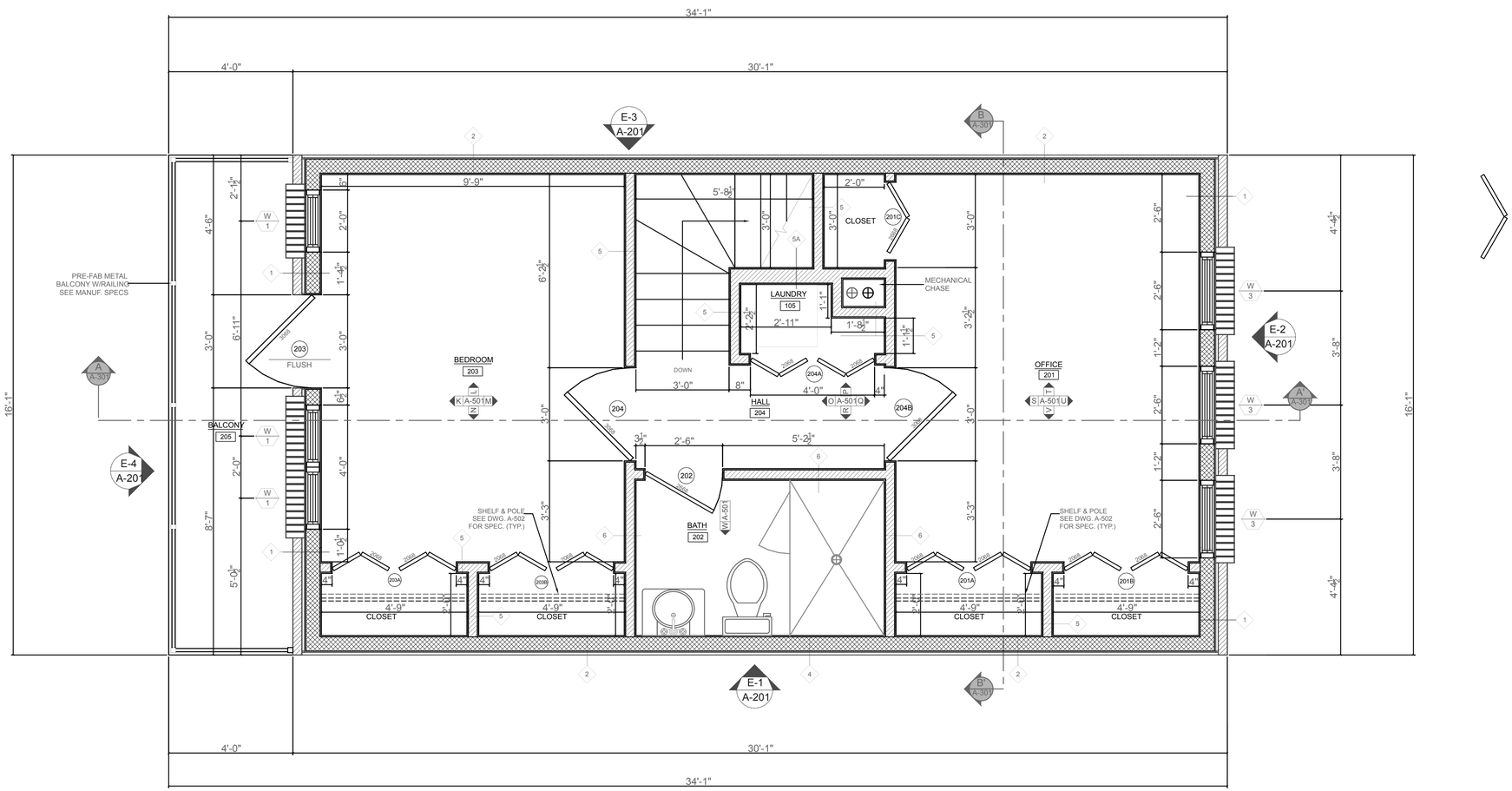

SECOND FLOOR PLAN

SCALE: 1/2" = 1'-0"

REVISIONS	BY

SENIUK RESIDENCE

528 TITAN STREET
PHILADELPHIA, PA 19147

PHOTODESIGN.NET
732 SANSOM STREET
PHILADELPHIA, PA
19106
215-629-0295

AGE QUOD AGIS

ARCHITECTURAL STAMP

DRAWN	SRH
CHECKED	
DATE	7/29/2015
SCALE	AS INDICATED
JOB NO.	15-014
SHEET	A-102

OF X SHEETS